IPC980

IP67-rated Industrial System with Intel® Core™ Processors Series 2 & 14th/13th/12th Gen Intel® Core™ i Processor, socket LGA-1700 supported, Intel® H610E, and Front-access I/O

▲ Front view

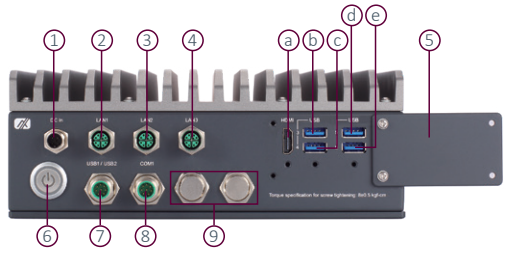

1. 1 x DC power
2. Intel® I219-LM (LAN1)
3. Intel® I226-V (LAN2)
4. Intel® I226-V (LAN3)
5. Maintenance I/O window
   a. HDMI
   b. USB 3.2 Gen 1 (USB3)
   c. USB 3.2 Gen 1 (USB4)
   d. USB 3.2 Gen 1 (USB5)
   e. USB 3.2 Gen 1 (USB6)
6. Power button with LED
7. 2 x USB 2.0 (USB1, USB2)
8. RS-232/422/485 (COM1)
9. 2 x optional I/O

DDR5 | Fanless | IP67 | M12 Connector | 2.5GbE

Features

- M12 connectors and IP67 housing
- Optional I/O for expansion
- Intelligent power management: ignition and USB power on/off control
- EN 61000-6-2 certified

Specifications

Standard Color	Silver & black	
Construction	Aluminum extrusion heavy-duty cold-rolled steel	
Processor System	CPU Level	Intel® Core™ Processors Series 2 & 14th/13th/12th Gen Intel® Core™ i processor, up to 65W*
	Chipset	Intel® H610E
System Memory	2 x 262-pin DDR5 5600/4800 non-ECC SO-DIMM, up to 96GB**	
System I/O	Ethernet	2 x 2.5GbE LAN (Intel® I226-V, M12 X-coded) 1 x GbE LAN (Intel® I219-LM, M12 X-coded)
	Serial	1 x RS-232 (4-wire)/RS-422/485 (default: RS-232, M12 A-coded)
	USB	2 x USB 2.0 (M12 A-coded) 4 x USB 3.2 Gen 1 (5G) Type-A 1 x USB 2.0 (internal, up to 30 mm) 180D Type-A
	Display	1 x HDMI 1.4b with 4096 x 2160 resolution supported
TPM	dTPM2.0	

Specifications

Expansion Interface	1 x full-size PCI Express Mini Card slot (USB & PCIe interface) with SIM slot and 3 x antenna openings 2 x blank I/O openings are reserved for expansion
Storage	1 x SSD/HDD drive bay (7/9.5/15 mm height) 1 x SSD/HDD drive bay (optional, 7/9.5/15 mm height, project-base support) 1 x M.2 Key M 2280 socket (PCIe x4 Gen 3)
Power Input and Ignition Control	Input: 18 to 36 VDC ACC ignition 1 x DC power connector (M12, A-coded) 1 x power on/off button with LED (default ATX) AT/ATX mode through BIOS setting
Operating Temperature	-20°C to +60°C with Intel® Core™ Processors Series 2 or 14th/13th/12th Gen Intel® Core™ i processor and industrial wide-temp SSD, 0.7 m/s air flow***
Storage Temperature	-40°C to +80°C
Relative Humidity	10% to 90% relative humidity, non-condensing
Vibration	IEC 60068-2-64 2019 (with SSD: 3Grms, random, 5 to 500 Hz) MIL-STD-810H, Method 514.8, and Category 20
Shock	IEC 60068-2-27 2008 (with SSD: 50G, half-sine, and 11 ms duration) MIL-STD-810H, Method 516.8, and Procedure I
IP Rated	IP67
Dimensions (D x W x H)	255 x 230 x 86.5 mm (10.04" x 9.06" x 3.41")
Weight (net/gross)	4.8 kg (10.58 lb)/6.3 kg (13.89 lb)
Certifications	CE (EN 61000-6-4/EN 61000-6-2), FCC
OS Support	Windows® 10, Windows® 11, Windows® 10 IoT, Windows® 11 IoT, and Linux OS

*Please refer to the user manual for the supported CPU list.
**The Intel® Core™ Processors Series 2 or 14th Gen processors support a maximum single SO-DIMM capacity of up to 48GB.
***CPU power settings can be adjusted in the BIOS to optimize performance and operating temperature.

Ordering Information

System

IPC980-H-F1 (P/N: E26G980100)	IP67-rated industrial system with Intel® Core™ Processors Series 2 or 14th/13th/12th Gen Intel® Core™ i processor, and Intel® H610E

Optional I/O Kit

590000094200	2 x USB 2.0 (1 x M12 A-coded)
826G9801030E	8-bit TTL programmable DIO (1 x M12 A-coded)
590000094100	1 x RS-232 (4-wire)/RS-422/485 (default: RS-232, M12 A-coded)
826G9801040E	MIO108 PCIe mini card module for 2 CAN bus expansion kit, CAN 2.0 A/B (1 x M12 A-coded)
1 x RS-232 (4-wire)/RS-422/485 (default: RS-232, 1 x M12 A-coded, project-based support)	

Optional Accessory

LGA1700 socket Intel® Core™ Processors Series 2 or 14th/13th/12th Gen Intel® Core™ i processor	
DDR5 5600/4800 non-ECC SO-DIMM	
2.5" SATA HDD/SSD	
2.5" SATA HDD/SSD tray for the 2nd HDD/SSD expansion (project-base support)	
826G9801010E	Wall mount kit
509000002200	9NA0908344 FSP 90W (Not supporting the ignition function)

Dimensions

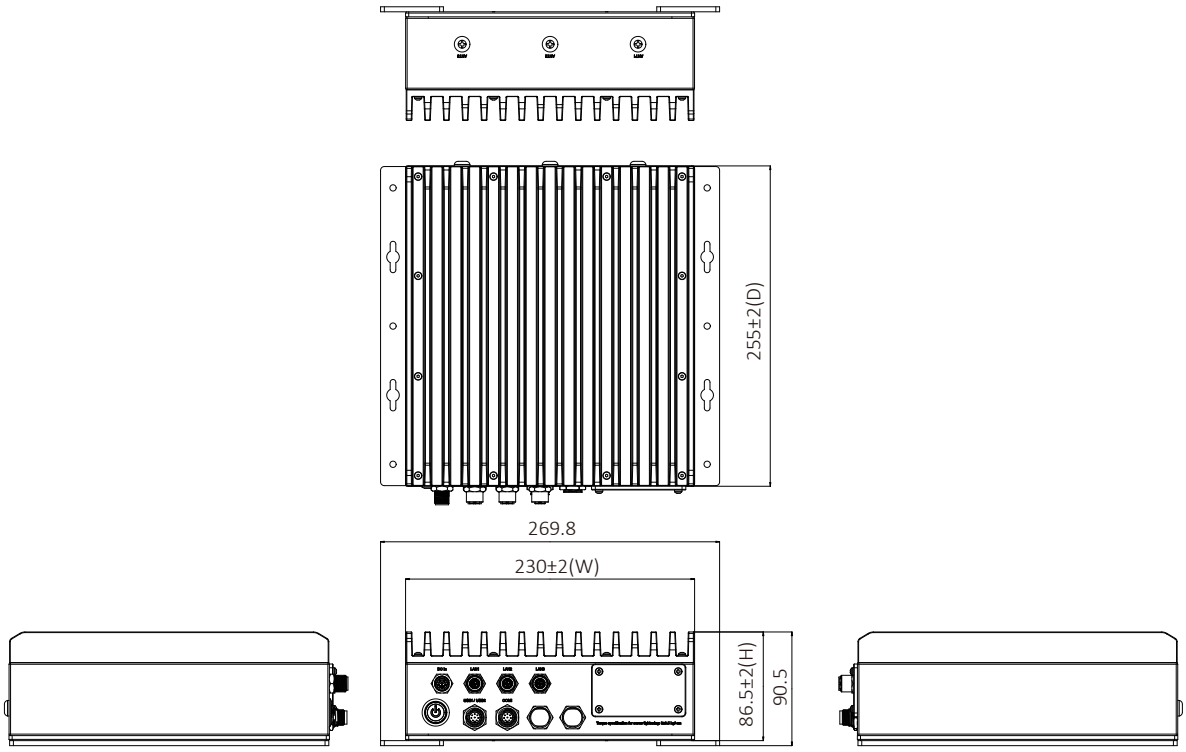
255±2(D)
269.8
230±2(W)
86.5±2(H)
90.5

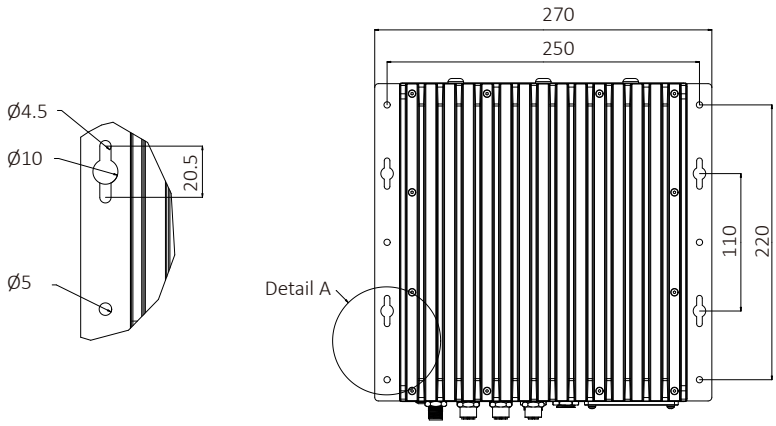
Ø4.5
Ø10
20.5
Ø5
Detail A
270
250
110
220